INTIALS: -
JOB NUMBER: 31023
DATE: -

MAIN FILE: -
DEPT: -
DEALER: -

~~PRODUCTION APPROVED~~

NOTES:
1. OVERALL HEIGHT IS IN LOADED CONDITION. UNLOADED HEIGHTS MAY BE 4" ABOVE HEIGHTS SHOWN.
2. DO NOT SCALE DRAWING.
3. ALL DIMENSIONS ARE APPROXIMATE AND SUBJECT TO ENGINEERING CHANGES.
4. DRAWING MAY OR MAY NOT SHOW ALL ITEMS AS DESCRIBED IN THE WRITTEN DETAIL SPECIFICATIONS.
5. INCLUSION OF AN ITEM ON THE DRAWING DOES NOT CONSTITUTE INCLUSION OF THAT ITEM WITH THE FINAL DELIVERED UNIT.
6. THE EFFECTIVE DOOR OPENINGS WILL BE APPROX. 2" LESS THAN THE NOTED COMPARTMENT OPENING FOR ROLL UP DOORS AND UP TO APPROX. 4" LESS FOR HINGED DOORS

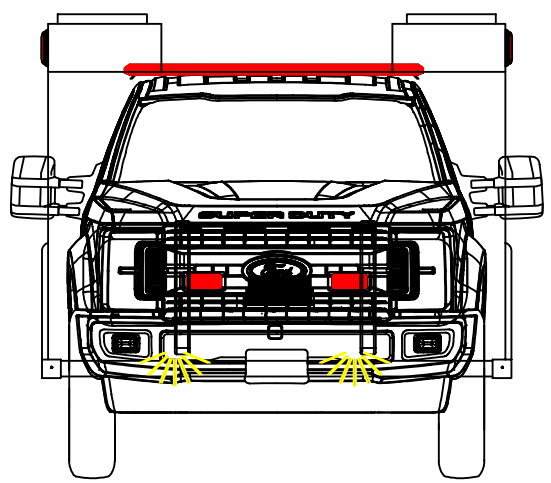

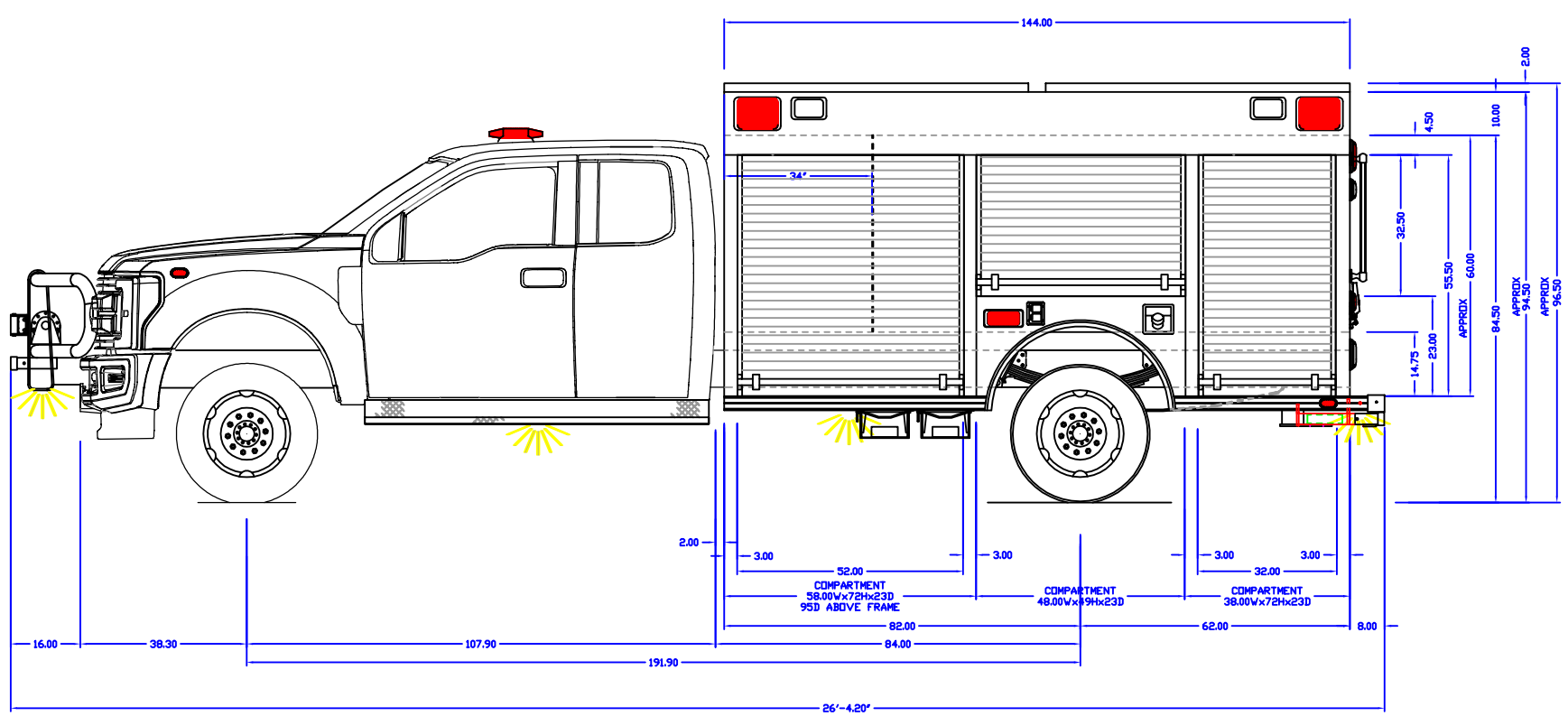

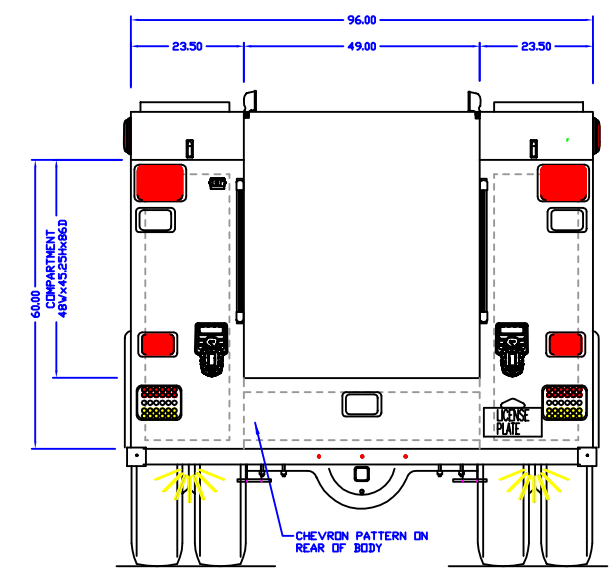

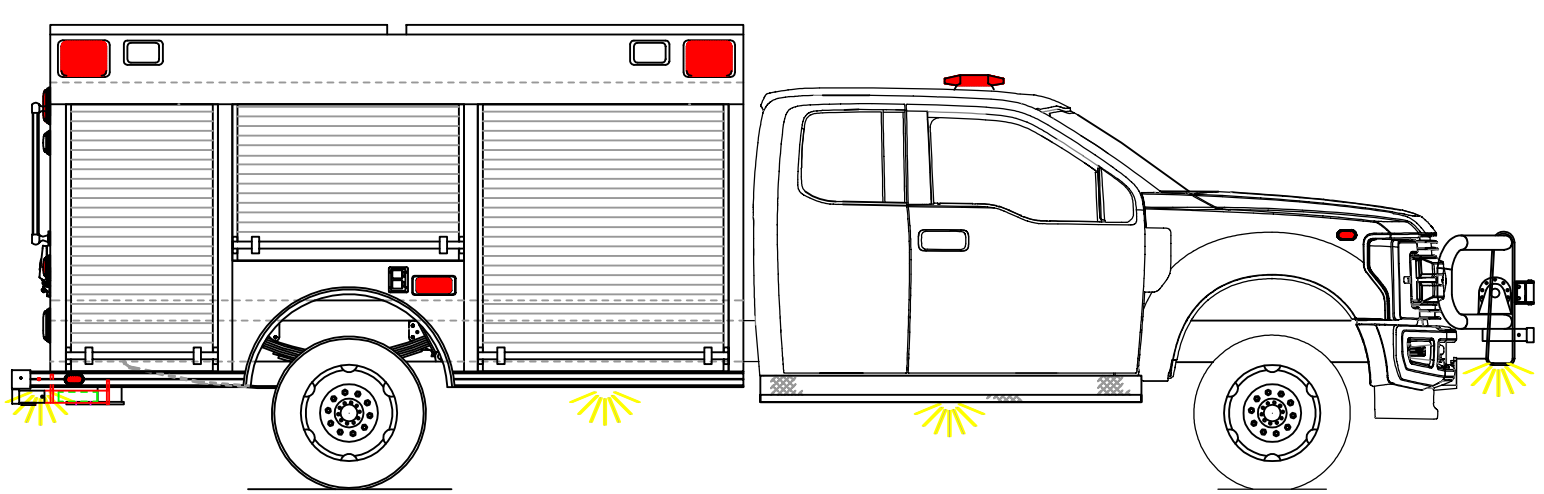

REVISED: WLM	DATE: 10-12-22	
REVISED: WLM	DATE: 11-08-21	
DRAWN: WLM	DATE: 06-16-21	

PROPRIETARY AND CONFIDENTIAL
THE INFORMATION CONTAINED IN THIS DRAWING IS THE SOLE PROPERTY OF ROSENBAUER. ANY REPRODUCTION IN PART OR AS A WHOLE WITHOUT THE WRITTEN PERMISSION OF ROSENBAUER IS PROHIBITED.

APPROVED BY:

CHASSIS: FORD	
PUMP: NA	
TANK: NA	
PANEL MATL: NA	
COMP INTERIOR: SPATTER FINISH	
MAXIMUM HEIGHT	NONE
MAXIMUM LENGTH	NONE
BODY WIDTH	96"

TANNER VOL. FIRE DEPT., AL

rosenbauer

ROSENBAUER MINI 1/8"

DRAWING NUMBER: tanner, al

REV: -